**Suffolk Construction Company, Inc.**
65 Allerton Street
Boston, Massachusetts 02119
P: (617) 445-3500
F: (617) 541-2128

**Project: 226052 DFCI-BIDMC New Cancer Hospital - 1 Joslin Place - Construction**
1 Joslin Place
Boston, Massachusetts 02215

# RFI #0-PB-125: Trap Primer & Trap Guard Confirmation

| | | | |
|---|---|---|---|
| **Revision** | 0 | **Status** | Closed on 03/12/26 |
| **To** | Hyunsuk Yun (Payette Associates, Inc. (BOSTON))<br>Jensen Ying (Payette Associates, Inc. (BOSTON))<br>Emilio Cardarelli (PAYETTE)<br>Jeff Abramson (Payette Associates, Inc. (BOSTON))<br>Jessica Hoctor (Payette Associates, Inc. (BOSTON))<br>Mollica Manandhar (Payette Associates, Inc. (BOSTON)) | **From** | Benjamin Watkins (Suffolk Construction)<br>65 Allerton St.<br>Boston, Massachusetts 02119 |
| **Date Initiated** | Feb 27, 2026 | **Due Date** | Mar 6, 2026 |
| **Location** | | **Project Stage** | Bidding |
| **Cost Impact** | | **Schedule Impact** | |
| **Spec Section** | 221140 - PLUMBING SPECIALTIES | **Cost Code** | |
| **Drawing Number** | | **Reference** | |
| **Linked Drawings** | | | |
| **Received From** | Benjamin Watkins (Suffolk Construction) | **Sub Job** | |
| **Copies To** | Jeff Abramson (Payette Associates, Inc. (BOSTON)), Elisa Arriaga (Vanasse Hangen Brustlin, Inc. (BOSTON)), BR+A CA-Admin (Bard, Rao + Athanas Consulting Engineers, LLC (BOSTON)), Emilio Cardarelli (PAYETTE), Joy Clark (Leggat McCall Properties LLC), Nathan Crowley (Suffolk Construction), Emil Giordano (Suffolk Construction), Kevin Griffin (Leggat McCall Properties LLC), Benjamin Hedges (Suffolk Construction), Jessica Hoctor (Payette Associates, Inc. (BOSTON)), Silas Mackey (Suffolk Construction), Kevin Malenchini (Suffolk Construction), Mollica Manandhar (Payette Associates, Inc. (BOSTON)), Rick Medeiros (Suffolk Construction), Rob Morsi (Suffolk Construction), Steve Mulligan (St. Onge Company (YORK)), Christopher O'Neil (Suffolk Construction), Joel Perry (Suffolk Construction), Kyle Reilly (Suffolk Construction), John Sanderson (Bard, Rao + Athanas Consulting Engineers, LLC (BOSTON)), Henry Sniezek (Suffolk Construction), Ben Stanton (Leggat McCall Properties LLC), Dan Sullivan (Leggat McCall Properties LLC), Sabrina Torchia (Suffolk Construction), Bob Walsh (Leggat McCall Properties LLC), Benjamin Watkins (Suffolk Construction), Jensen Ying (Payette Associates, Inc. (BOSTON)), Hyunsuk Yun (Payette Associates, Inc. (BOSTON)) | | |

## ADDITIONAL FIELDS

| | | | |
|---|---|---|---|
| **Required Reviewers** | | **Urgency** | Medium |

## Activity

**Question**

**Question from Benjamin Watkins Suffolk Construction** *on Friday, Feb 27, 2026 at 01:59 PM EST*

Please refer to pre-bid RFI #58 response dated 11/20/2025.

1. Per the 11/20/25 response to pre-bid RFI #58, all trap primers will be electronic type trap priming assemblies. The Trap Primer specifications were not updated with the Addendum 02 issue. Please confirm that electronic trap priming assemblies are the correct design standard.

2. Per the plumbing specifications, all garage drains are to receive a trap primer. This would result in significant costs to supply water for a trap primer at each garage drain. Please confirm if the 90-10 rule is acceptable at garage drains. This would mean that 90% of the garage drains in a single parking level would receive a trap guard, and 10% of the floor drains in a single room would receive a trap priming device.

**Attachments**
RFI 0-PB-125_Trap Primer & Trap Guard Confirmation.pdf

**Official Response**

**Response from Emilio Cardarelli PAYETTE** *on Monday, Mar 9, 2026 at 09:07 PM EDT*

Please see attached response from BR+A.

**Attachments**
RFI 0-PB-125 Trap Primer & Trap Guard Confirmation_BR+A.pdf

**All Replies**

**Response from Emilio Cardarelli PAYETTE** *on Monday, Mar 9, 2026 at 09:07 PM EDT*

Please see attached response from BR+A.

**Attachments**
RFI 0-PB-125 Trap Primer & Trap Guard Confirmation_BR+A.pdf

**Suffolk Construction Company, Inc.**
65 Allerton Street
Boston, Massachusetts 02119
P: (617) 445-3500
F: (617) 541-2128

**Project: 226052 DFCI-BIDMC New Cancer Hospital - 1 Joslin Place - Construction**
1 Joslin Place
Boston, Massachusetts 02215

# RFI #0-PB-125: Trap Primer & Trap Guard Confirmation

| | | | |
|---|---|---|---|
| **Revision** | 0 | **Status** | Open |
| **To** | Emilio Cardarelli (PAYETTE)<br>Hyunsuk Yun (Payette Associates, Inc. (BOSTON))<br>Jeff Abramson (Payette Associates, Inc. (BOSTON))<br>Jensen Ying (Payette Associates, Inc. (BOSTON))<br>Jessica Hoctor (Payette Associates, Inc. (BOSTON))<br>Mollica Manandhar (Payette Associates, Inc. (BOSTON)) | **From** | Benjamin Watkins (Suffolk Construction)<br>65 Allerton St.<br>Boston, Massachusetts 02119 |
| **Date Initiated** | | **Due Date** | 3/6/2026 |
| **Location** | | **Project Stage** | Bidding |
| **Cost Impact** | | **Schedule Impact** | |
| **Spec Section** | 221140 - PLUMBING SPECIALTIES | **Cost Code** | |
| **Drawing Number** | | **Reference** | |
| **Linked Drawings** | | | |
| **Received From** | Benjamin Watkins (Suffolk Construction) | **Sub Job** | |
| **Copies To** | BR+A CA-Admin (Bard, Rao + Athanas Consulting Engineers, LLC (BOSTON)), Jeff Abramson (Payette Associates, Inc. (BOSTON)), Elisa Arriaga (Vanasse Hangen Brustlin, Inc. (BOSTON)), Emilio Cardarelli (PAYETTE), Joy Clark (Leggat McCall Properties LLC), Nathan Crowley (Suffolk Construction), Emil Giordano (Suffolk Construction), Kevin Griffin (Leggat McCall Properties LLC), Benjamin Hedges (Suffolk Construction), Jessica Hoctor (Payette Associates, Inc. (BOSTON)), Silas Mackey (Suffolk Construction), Kevin Malenchini (Suffolk Construction), Mollica Manandhar (Payette Associates, Inc. (BOSTON)), Rick Medeiros (Suffolk Construction), Rob Morsi (Suffolk Construction), Steve Mulligan (St. Onge Company (YORK)), Christopher O'Neil (Suffolk Construction), Joel Perry (Suffolk Construction), Kyle Reilly (Suffolk Construction), John Sanderson (Bard, Rao + Athanas Consulting Engineers, LLC (BOSTON)), Henry Sniezek (Suffolk Construction), Ben Stanton (Leggat McCall Properties LLC), Dan Sullivan (Leggat McCall Properties LLC), Sabrina Torchia (Suffolk Construction), Bob Walsh (Leggat McCall Properties LLC), Benjamin Watkins (Suffolk Construction), Jensen Ying (Payette Associates, Inc. (BOSTON)), Hyunsuk Yun (Payette Associates, Inc. (BOSTON)) | | |

## ADDITIONAL FIELDS

| | |
|---|---|
| **Required Reviewers** | **Urgency** |

## Activity

**Question**

**Question from Benjamin Watkins Suffolk Construction** *on Friday, Feb 27, 2026 at 01:59 PM EST*

Please refer to pre-bid RFI #58 response dated 11/20/2025.

1. Per the 11/20/25 response to pre-bid RFI #58, all trap primers will be electronic type trap priming assemblies. The Trap Primer specifications were not updated with the Addendum 02 issue. Please confirm that electronic trap priming assemblies are the correct design standard.

2. Per the plumbing specifications, all garage drains are to receive a trap primer. This would result in significant costs to supply water for a trap primer at each garage drain. Please confirm if the 90-10 rule is acceptable at garage drains. This would mean that 90% of the garage drains in a single parking level would receive a trap guard, and 10% of the floor drains in a single room would receive a trap priming device.

*Awaiting an Official Response*

Please refer to pre-bid RFI #58 response dated 11/20/2025.

1. Per the 11/20/25 response to pre-bid RFI #58, all trap primers will be electronic type trap priming assemblies. The Trap Primer specifications were not updated with the Addendum 02 issue. Please confirm that electronic trap priming assemblies are the correct design standard.

2. Per the plumbing specifications, all garage drains are to receive a trap primer. This would result in significant costs to supply water for a trap primer at each garage drain. Please confirm if the 90-10 rule is acceptable at garage drains. This would mean that 90% of the garage drains in a single parking level would receive a trap guard, and 10% of the floor drains in a single room would receive a trap priming device.

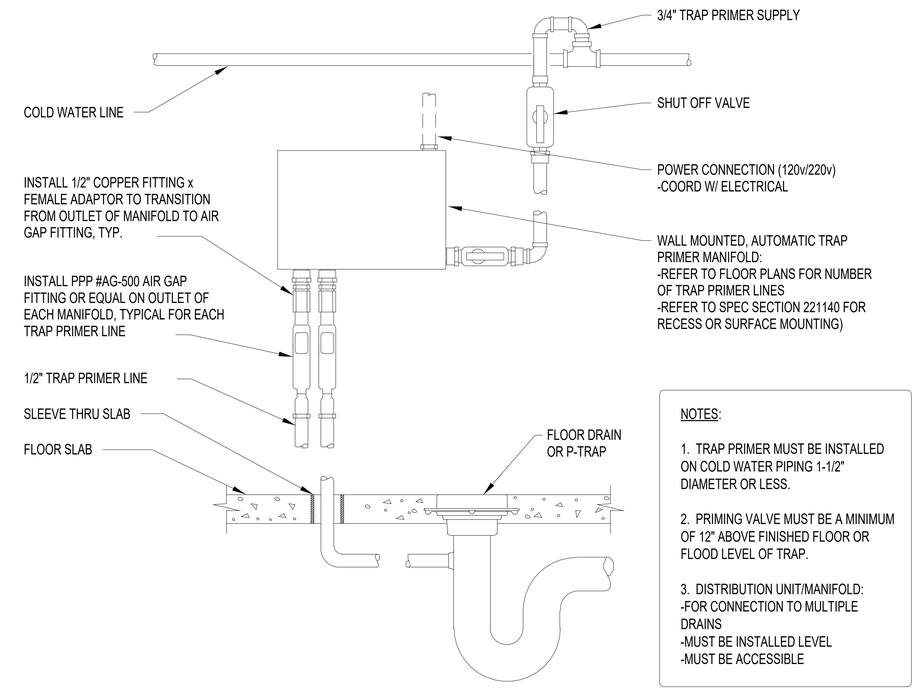


6 ELECTRONIC TRAP PRIMING ASSEMBLY DETAIL WITH AIR GAP FITTING

Snip from P5.01

NTS

B. Trap Primers

1. Individual fixtures shall be primed by Precision Plumbing products, Inc., model Prime Rite, or Prime Pro. Device shall be machined brass with no springs or diaphragms. Mount 12" above trap to be primed.
2. Multiple fixtures shall be primed by Precision Plumbing Products, Model PT-4 through 30 and rated for quantity of traps to be served. The priming manifold shall be capable of supplying 2 oz. of water per trap supply at 20 psig every 24 hours. The device shall be factory assembled and prepiped complete with ball valve, water hammer arrestor, copper barrel hammer arrestor, copper barrel with piston, solenoid valve air gap and 1/2" trap primer connections. Electronic connections include single point 120V, manual override switch breaker, timer with relay. Unit shall be factory tested and supplied in a wall mounted 16-gauge steel cabinet.
3. Install trap primers at all drains where trap seal is subject to evaporation, including open end drains (OEDs), mechanical room drains that do not receive indirect waste and toilet room floor drains and as shown on the drawings.

C. Trap Seals

1. Individual fixture trap guards shall be an ASSE 1072 barrier type seal protective device. Similar to ProVent trap guard or approval equal.
2. Trap Seals may only be used where there a minimum of ten (10) trapped floor drains within a room and/or compartment. May not be used on Kitchen/Servery Drains and Garage Drains.

Snip from Spec Section 221140

| | | | | | | |
|---|---|---|---|---|---|---|
| Please refer to the attachment. The plumbing specification section 221140-2.8B & 2.8C specifies that individual fixtures shall be primed by a pressure drop type Trap Primer, while multiple fixtures should be primed by an electronically controlled Trap Primer. The plumbing detail sheets provide a detail for an electronic trap priming assembly with an air gap fitting, but they do not provide a detail for a pressure drop type trap primer.<br><br>Please confirm that all drains that are subject to evaporation should receive an electronic type trap priming assembly and update the plumbing specifications as needed. | Plumbing | 11/14/2025 | 11/21/2025 | Bidding | Confirmed. Trap primers will be electronic type trap priming assembly. | Snip from Pre-Bid RFI #58 response<br><br>Plumbing |

**Suffolk Construction Company, Inc.**
65 Allerton Street
Boston, Massachusetts 02119
P: (617) 445-3500
F: (617) 541-2128

Received 03/02/2026

**Project: 226052 DFCI-BIDMC New Cancer Hospital - 1 Joslin Place - Construction**
1 Joslin Place
Boston, Massachusetts 02215

# RFI #0-PB-125: Trap Primer & Trap Guard Confirmation

| | | | |
|---|---|---|---|
| **Revision** | 0 | **Status** | Open |
| **To** | Emilio Cardarelli (PAYETTE)<br>Hyunsuk Yun (Payette Associates, Inc. (BOSTON))<br>Jeff Abramson (Payette Associates, Inc. (BOSTON))<br>Jensen Ying (Payette Associates, Inc. (BOSTON))<br>Jessica Hoctor (Payette Associates, Inc. (BOSTON))<br>Mollica Manandhar (Payette Associates, Inc. (BOSTON)) | **From** | Benjamin Watkins (Suffolk Construction)<br>65 Allerton St.<br>Boston, Massachusetts 02119 |
| **Date Initiated** | Feb 27, 2026 | **Due Date** | Mar 6, 2026 |
| **Location** | | **Project Stage** | Bidding |
| **Cost Impact** | | **Schedule Impact** | |
| **Spec Section** | 221140 - PLUMBING SPECIALTIES | **Cost Code** | |
| **Drawing Number** | | **Reference** | |
| **Linked Drawings** | | | |
| **Received From** | Benjamin Watkins (Suffolk Construction) | **Sub Job** | |
| **Copies To** | BR+A CA-Admin (Bard, Rao + Athanas Consulting Engineers, LLC (BOSTON)), Jeff Abramson (Payette Associates, Inc. (BOSTON)), Elisa Arriaga (Vanasse Hangen Brustlin, Inc. (BOSTON)), Emilio Cardarelli (PAYETTE), Joy Clark (Leggat McCall Properties LLC), Nathan Crowley (Suffolk Construction), Emil Giordano (Suffolk Construction), Kevin Griffin (Leggat McCall Properties LLC), Benjamin Hedges (Suffolk Construction), Jessica Hoctor (Payette Associates, Inc. (BOSTON)), Silas Mackey (Suffolk Construction), Kevin Malenchini (Suffolk Construction), Mollica Manandhar (Payette Associates, Inc. (BOSTON)), Rick Medeiros (Suffolk Construction), Rob Morsi (Suffolk Construction), Steve Mulligan (St. Onge Company (YORK)), Christopher O'Neil (Suffolk Construction), Joel Perry (Suffolk Construction), Kyle Reilly (Suffolk Construction), John Sanderson (Bard, Rao + Athanas Consulting Engineers, LLC (BOSTON)), Henry Sniezek (Suffolk Construction), Ben Stanton (Leggat McCall Properties LLC), Dan Sullivan (Leggat McCall Properties LLC), Sabrina Torchia (Suffolk Construction), Bob Walsh (Leggat McCall Properties LLC), Benjamin Watkins (Suffolk Construction), Jensen Ying (Payette Associates, Inc. (BOSTON)), Hyunsuk Yun (Payette Associates, Inc. (BOSTON)) | | |

## ADDITIONAL FIELDS

| | |
|---|---|
| **Required Reviewers** | **Urgency** |

## Activity

**Question**

**Question from Benjamin Watkins Suffolk Construction** *on Friday, Feb 27, 2026 at 01:59 PM EST*

Please refer to pre-bid RFI #58 response dated 11/20/2025.

1. Per the 11/20/25 response to pre-bid RFI #58, all trap primers will be electronic type trap priming assemblies. The Trap Primer specifications were not updated with the Addendum 02 issue. Please confirm that electronic trap priming assemblies are the correct design standard.

2. Per the plumbing specifications, all garage drains are to receive a trap primer. This would result in significant costs to supply water for a trap primer at each garage drain. Please confirm if the 90-10 rule is acceptable at garage drains. This would mean that 90% of the garage drains in a single parking level would receive a trap guard, and 10% of the floor drains in a single room would receive a trap priming device.

**Attachments**
RFI 0-PB-125_Trap Primer & Trap Guard Confirmation.pdf

*Awaiting an Official Response*

BR+A Response:

BR+A has reviewed the above noted description.

1. Yes, electronic trap priming assemblies are the correct design standard. This has been re-confirmed with DFCI.
2. Per discussion with DFCI, the garage drains shall be primed by electronic trap primers. The primers are currently stacked and shall be supplied up & down from a cold water main on Level P3.

John Sanderson, BR+A March 05, 2026

Please refer to pre-bid RFI #58 response dated 11/20/2025.

1. Per the 11/20/25 response to pre-bid RFI #58, all trap primers will be electronic type trap priming assemblies. The Trap Primer specifications were not updated with the Addendum 02 issue. Please confirm that electronic trap priming assemblies are the correct design standard.

2. Per the plumbing specifications, all garage drains are to receive a trap primer. This would result in significant costs to supply water for a trap primer at each garage drain. Please confirm if the 90-10 rule is acceptable at garage drains. This would mean that 90% of the garage drains in a single parking level would receive a trap guard, and 10% of the floor drains in a single room would receive a trap priming device.

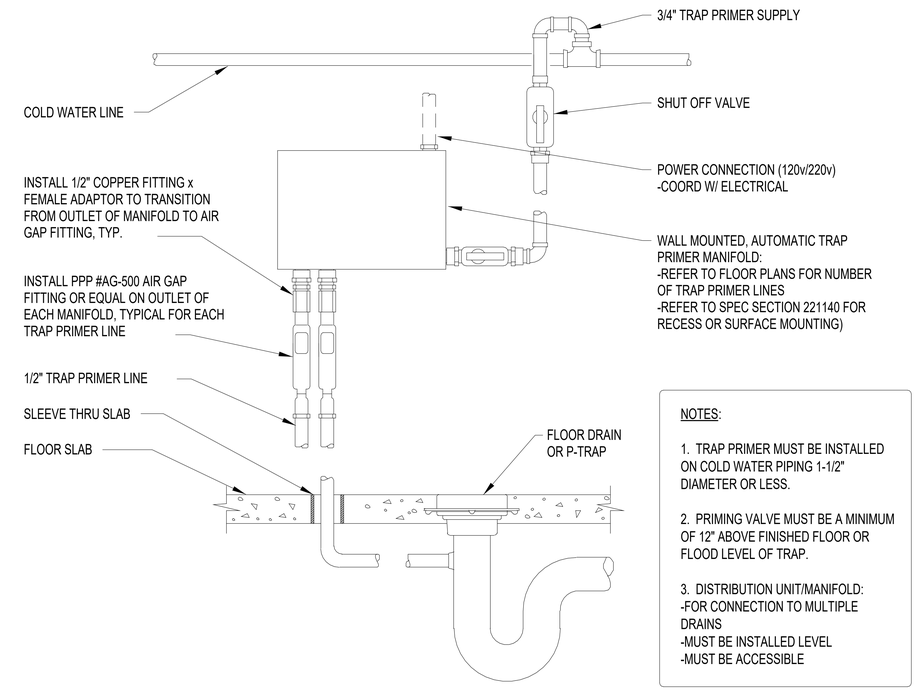


6 ELECTRONIC TRAP PRIMING ASSEMBLY DETAIL WITH AIR GAP FITTING

Snip from P5.01

NTS

B. Trap Primers

1. Individual fixtures shall be primed by Precision Plumbing products, Inc., model Prime Rite, or Prime Pro. Device shall be machined brass with no springs or diaphragms. Mount 12" above trap to be primed.
2. Multiple fixtures shall be primed by Precision Plumbing Products, Model PT-4 through 30 and rated for quantity of traps to be served. The priming manifold shall be capable of supplying 2 oz. of water per trap supply at 20 psig every 24 hours. The device shall be factory assembled and prepiped complete with ball valve, water hammer arrestor, copper barrel hammer arrestor, copper barrel with piston, solenoid valve air gap and 1/2" trap primer connections. Electronic connections include single point 120V, manual override switch breaker, timer with relay. Unit shall be factory tested and supplied in a wall mounted 16-gauge steel cabinet.
3. Install trap primers at all drains where trap seal is subject to evaporation, including open end drains (OEDs), mechanical room drains that do not receive indirect waste and toilet room floor drains and as shown on the drawings.

C. Trap Seals

1. Individual fixture trap guards shall be an ASSE 1072 barrier type seal protective device. Similar to ProVent trap guard or approval equal.
2. Trap Seals may only be used where there a minimum of ten (10) trapped floor drains within a room and/or compartment. May not be used on Kitchen/Servery Drains and Garage Drains.

Snip from Spec Section 221140

| | | | | | | |
|---|---|---|---|---|---|---|
| Please refer to the attachment. The plumbing specification section 221140-2.8B & 2.8C specifies that individual fixtures shall be primed by a pressure drop type Trap Primer, while multiple fixtures should be primed by an electronically controlled Trap Primer. The plumbing detail sheets provide a detail for an electronic trap priming assembly with an air gap fitting, but they do not provide a detail for a pressure drop type trap primer.<br><br>Please confirm that all drains that are subject to evaporation should receive an electronic type trap priming assembly and update the plumbing specifications as needed. | Plumbing | 11/14/2025 | 11/21/2025 | Bidding | Confirmed. Trap primers will be electronic type trap priming assembly. | Snip from Pre-Bid RFI #58 response<br><br>Plumbing |